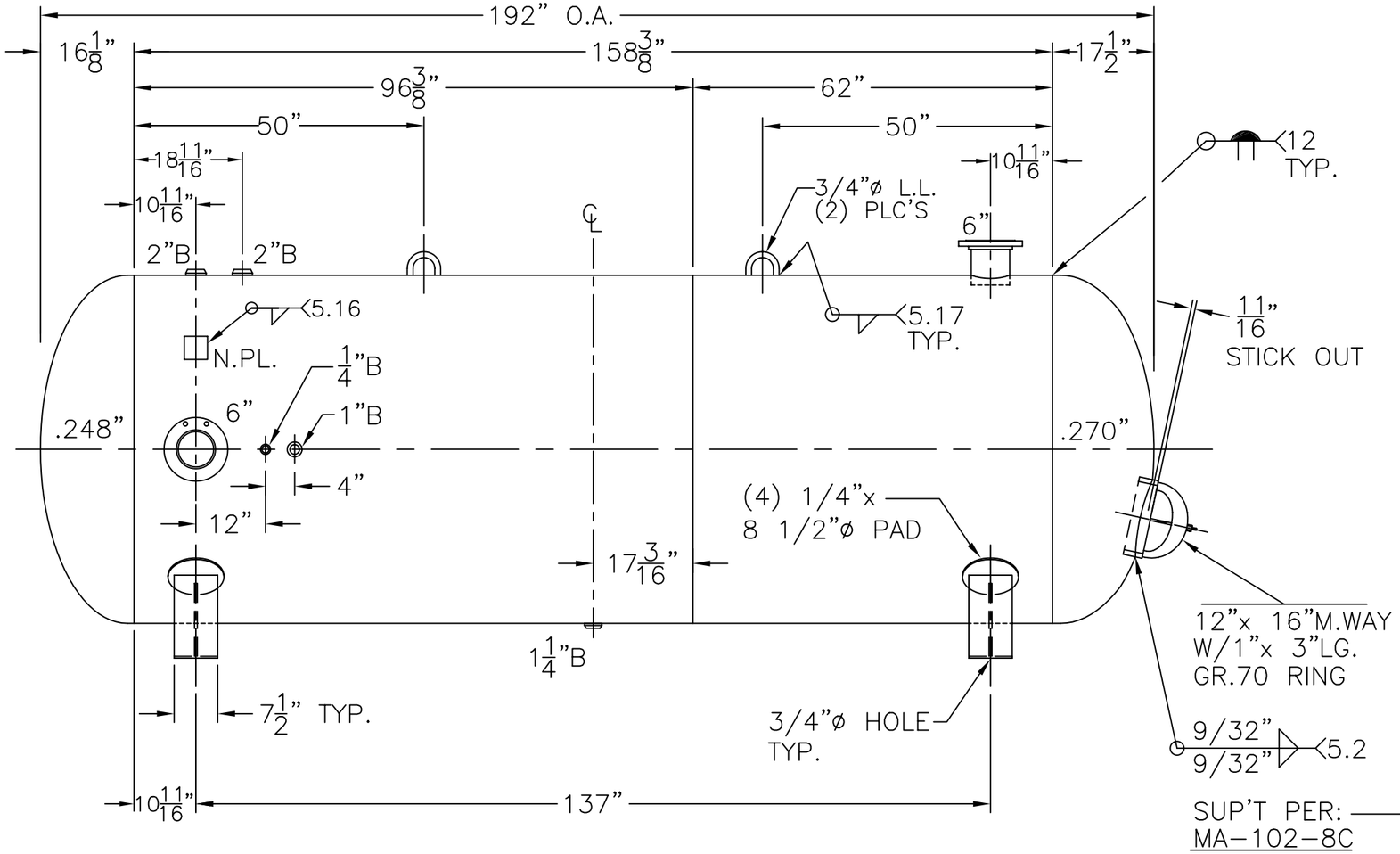

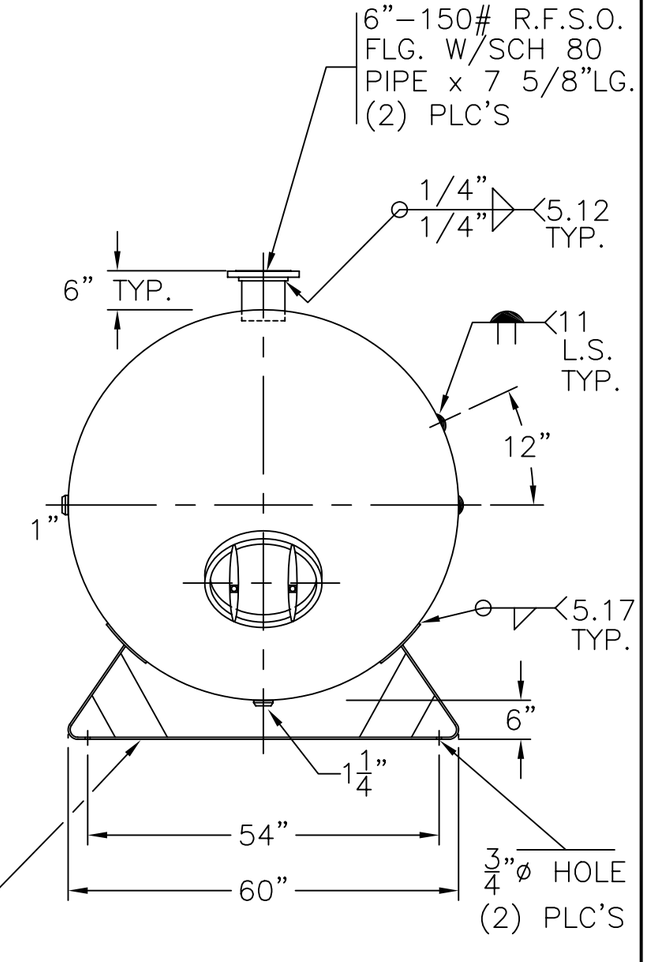

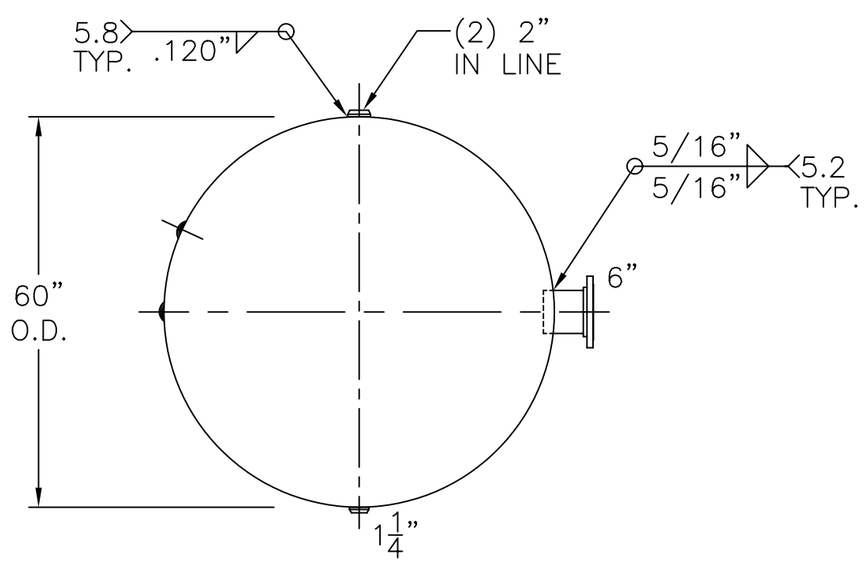

END VIEW W/OUT SUPT'S

NOTE: 1) HYDRO @ 218 PSIG. MIN.

SHELL / HEADS	LEFT – .248" SA-455 2:1 S.E.	60-HM-2180-W	REV. 3-3-06
	(.233"MIN.)		DATE: 8-7-81
	RIGHT-.270" MIN. SA-455 2:1 S.E.	FOR: HANSON STANDARD	
	(.262" MIN.)	HORIZ. AIR TANK	
	.288" SA-455		
		INSIDE: UNPAINTED	
M.A.W.P. 165 PSIG. @ 400 °F			
M.D.M.T. -20 °F @ 165 PSIG.		OUTSIDE: PRIME	
ASME. SECTION VIII DIV. 1, 2004 ADD 2005		CAD-"B" SIZE UNDER "STD"-SERIES	
X-RAY: RT-4 SPOT L.S. & HDS. G.S.		BY: J.G.	SCALE: 1/2"=12"
GALLONS: 2180	WT. 3592 LBS.	ROY E. HANSON JR. MFG.	
SERIAL NO.		1924 COMPTON AVE.	
N.B.		LOS ANGELES, CA 90011	