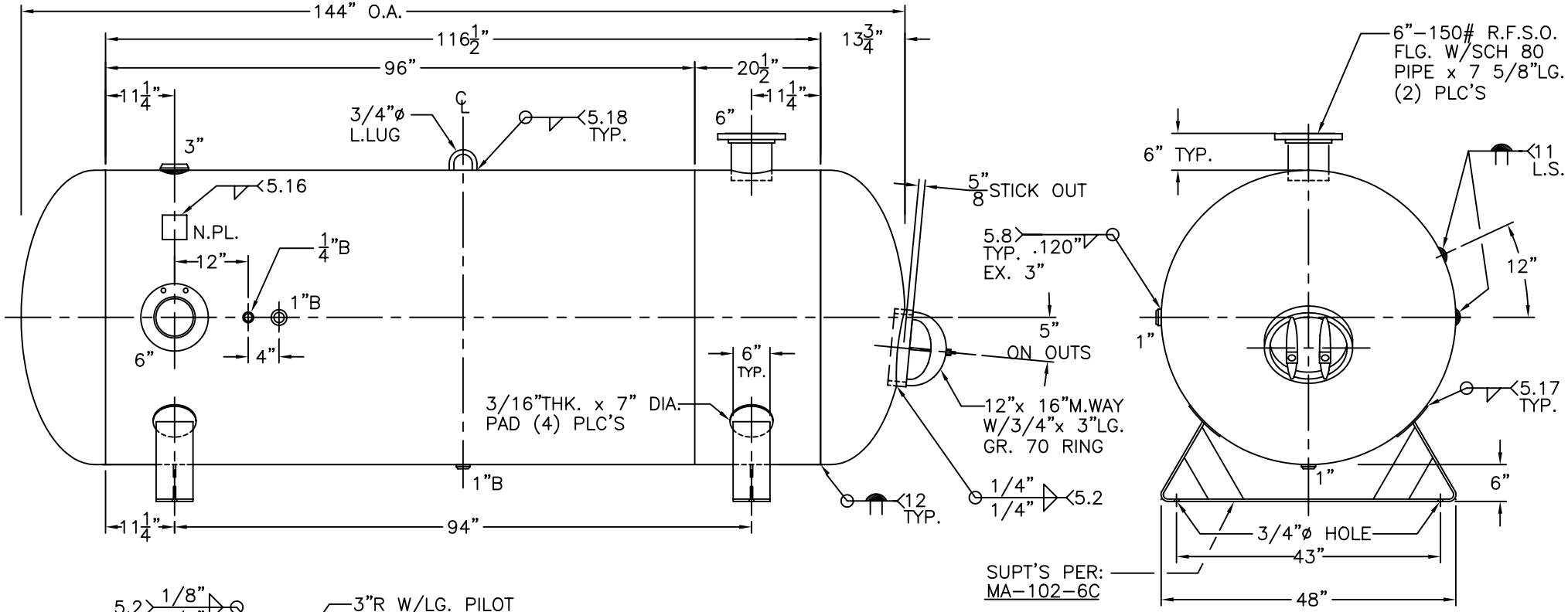

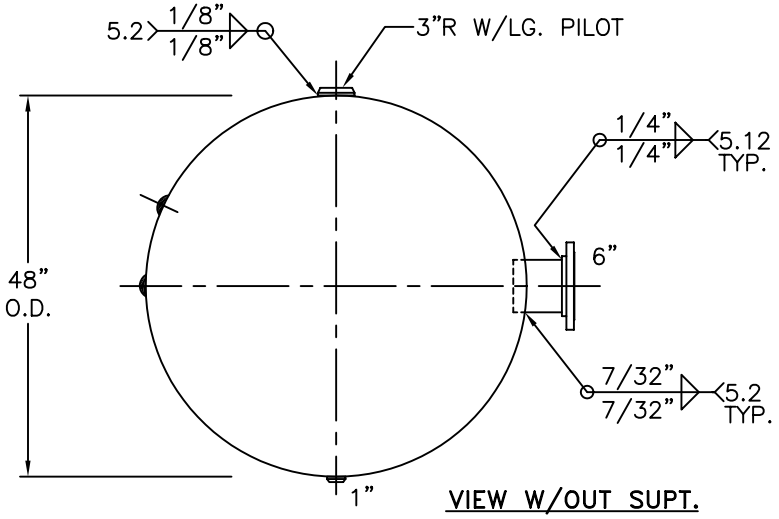

VIEW W/OUT SUPT.

NOTE: 1) HYDRO TEST @ 195 PSIG. MIN.

SHELL / HEADS	.245" SA-455 2:1 S.E.	48-HP-1060-W REV. 11-21-02
	JOGGLE	DATE: 3-14-94
		FOR: HANSON STANDARD
		HORIZ. AIR TANK.
	.218" SA-455	
		INSIDE: UNPAINTED
M.A.W.P.	150 PSIG. @ 400 °F	
M.D.M.T.	-20 °F 150 PSIG.	OUTSIDE: PRIME
ASME. SECTION VIII DIV. 1, 2001		CAD-"B" SIZE UNDER "STD"-SERIES
X-RAY:	RT-4 SPOT L.S. ONLY	BY: J.G. SCALE: 3/4"=12"
GALLONS:	1060 WT. 1742 LBS.	ROY E. HANSON JR. MFG.
SERIAL NO.		1924 COMPTON AVE.
N.B.		LOS ANGELES, CA 90011