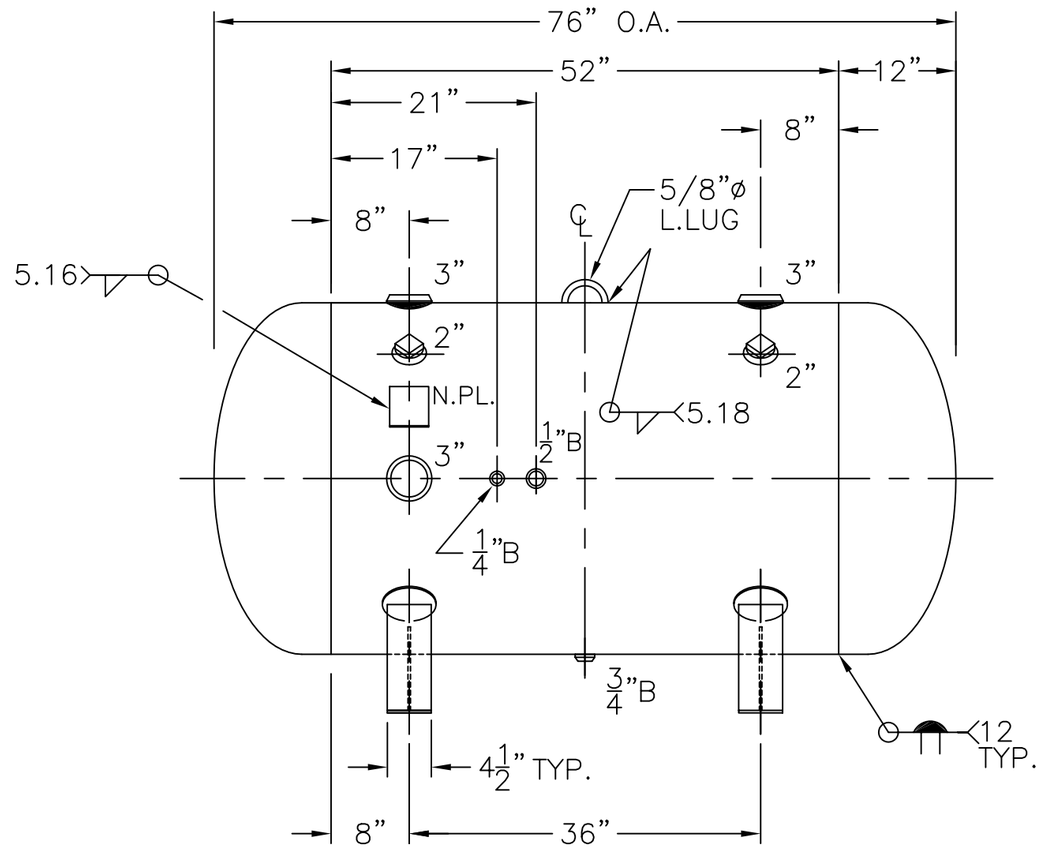

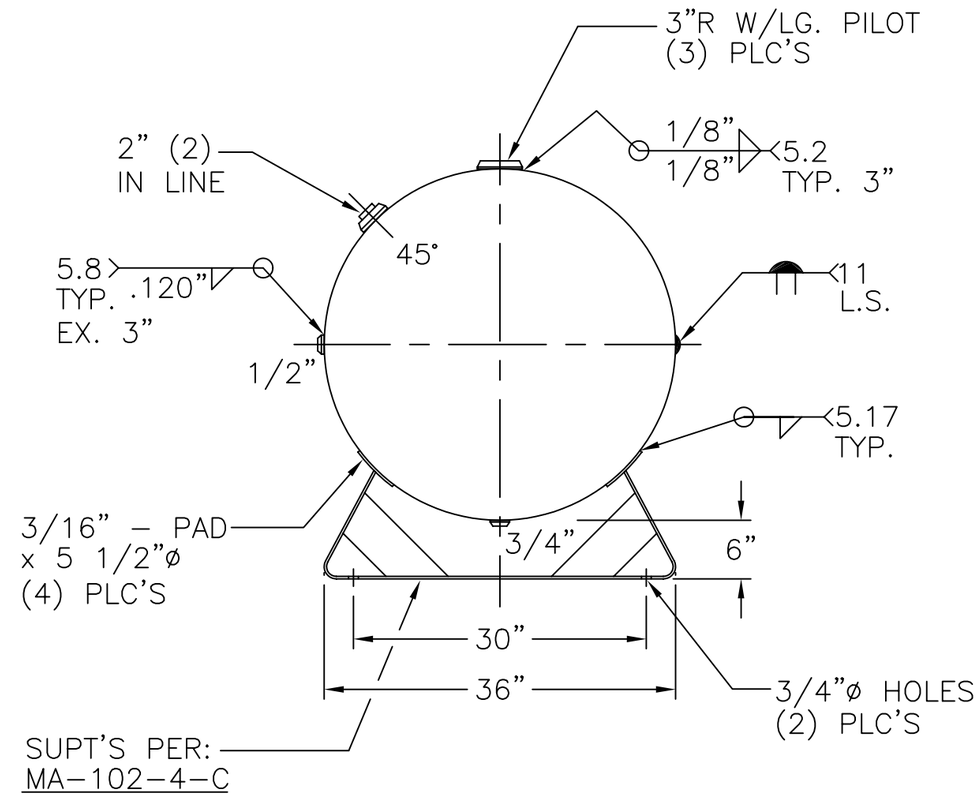

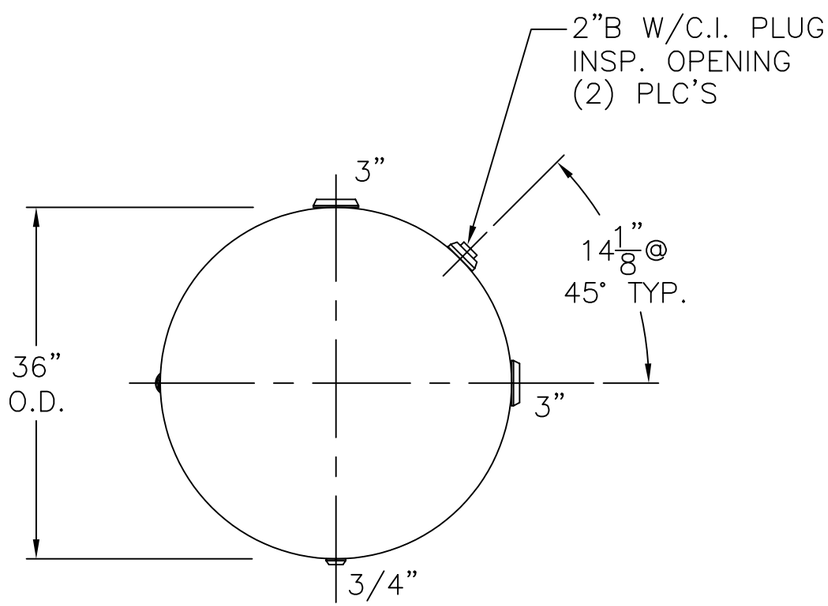

VIEW W/OUT SUPT'S

NOTE: 1) HYDRO @ 179 PSIG. MIN.

SHELL / HEADS	.182" SA–455 2:1 S.E.	36–HQ–300–W	REV. 11–18–02
	JOGGLE		DATE: 4–9–90
		FOR: HANSON STANDARD	
		HORIZ. AIR TANK	
	.164" SA–414–G		
		INSIDE: UNPAINTED	
M.A.W.P. 137 PSIG. @ 400 °F			
M.D.M.T. –20 °F @ 137 PSIG.		OUTSIDE: PRIME	
ASME SECTION VIII DIV. 1, 2001		CAD–"B" SIZE UNDER "STD"–SERIES	
X–RAY: RT–NO		BY: J.G.	SCALE: 3/4"=12"
GALLONS: 300	WT. 499 LBS.	ROY E. HANSON JR. MFG.	
SERIAL NO.		1924 COMPTON AVE. LOS ANGELES, CA 90011	