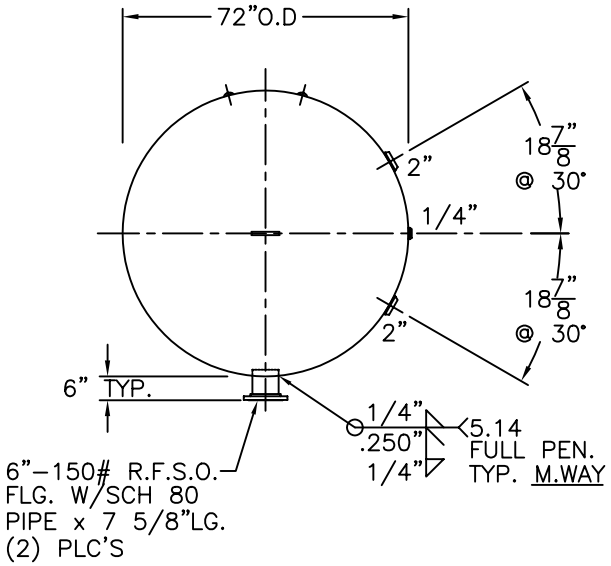

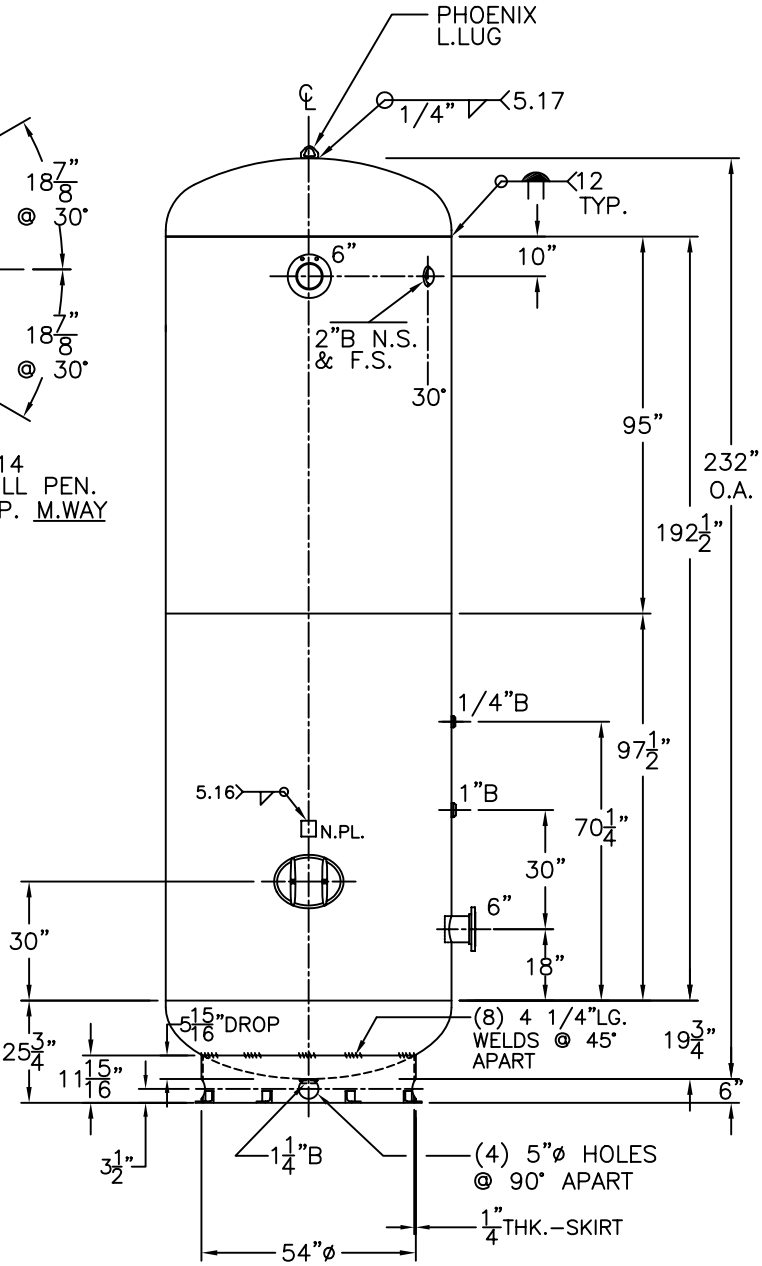

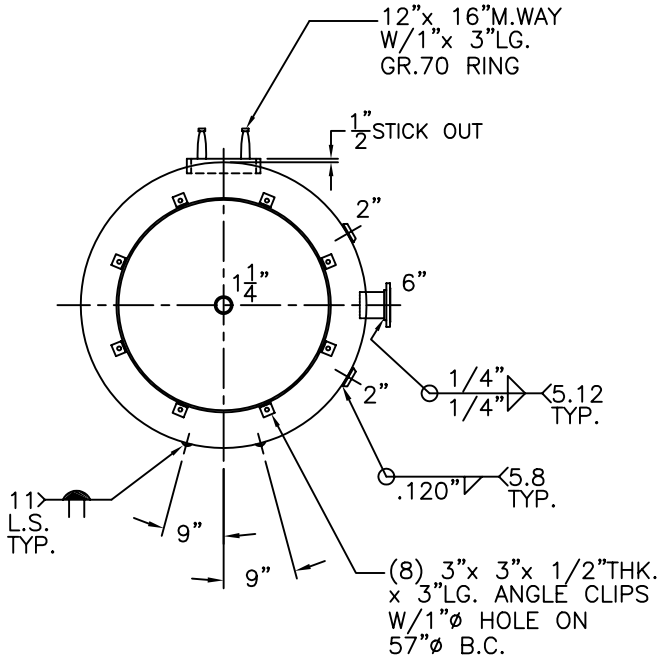

NOTE: 1) HYDRO @ 163 PSIG. MIN.

SHELL / HEADS	.280" SA–455 2:1 S.E. (.246"MIN.)
	.250" SA–455
M.A.W.P.	125 PSIG. @ 400 °F
M.D.M.T.	–20 °F 125 PSIG
ASME. SECTION VIII DIV. 1, 2001 ADD 2002	
X–RAY: RT–4 SPOT L.S.	
GALLONS: 3800	WT. 4496 LBS.
SERIAL NO.	
N.B.	

72–VG–3800–R	REV. 12–6–02
FOR: HANSON STANDARD VERT. AIR TANK	DATE: 4–30–99
INSIDE: UNPAINTED	
OUTSIDE: PRIME	
CAD "B"–SIZE UNDER "STD"–SERIES	
BY: J.G.	SCALE: 3/8"=12"

ROY E. HANSON JR. MFG.
1924 COMPTON AVE.
LOS ANGELES, CA 90011