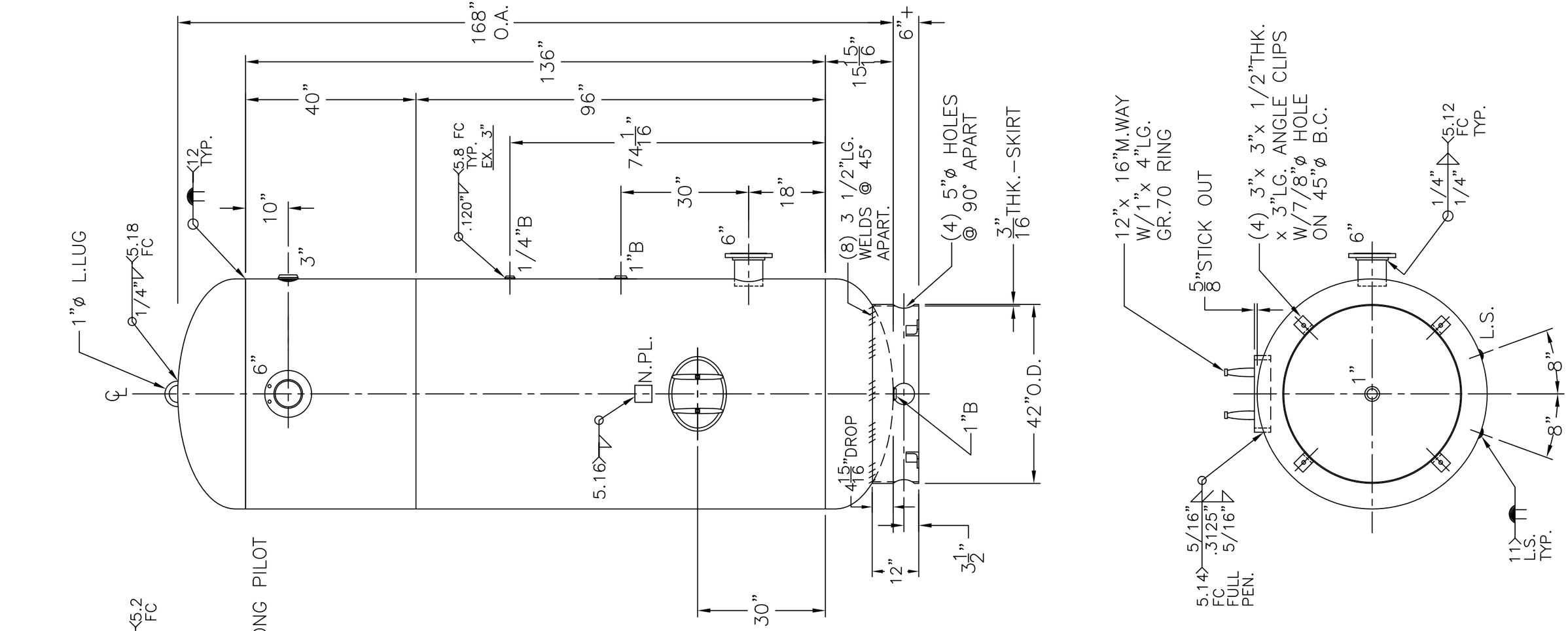

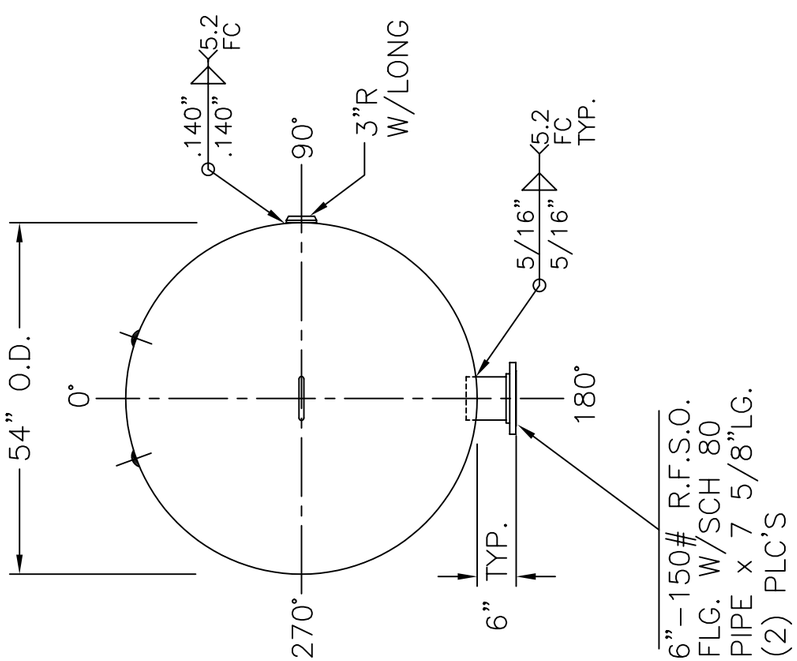

NOTE: 1) HYDRO @ 263 PSIG. MIN.

SHELL / HEADS	.3125" SA-455 2:1 S.E.	54-VA-1550-R	REV. 8-21-07
	(.297" MIN.)		DATE: 1-29-99
		FOR: HANSON STANDARD	
		VERT. AIR TANK	
	.3125" SA-455		
		INSIDE: UNPAINTED	
M.A.W.P. 200 PSIG. @ 400 °F			
M.D.M.T. -20 °F @ 200 PSIG.		OUTSIDE: PRIME	
ASME. SECTION VIII DIV. 1, 2004 ADD 2006		CAD "B" SIZE UNDER "STD"-SERIES	
X-RAY: RT-4 SPOT L.S. ONLY		BY: J.G.	SCALE:1/2"=12"
GALLONS: 1550	WT. 2993 LBS.	ROY E. HANSON JR. MFG.	
SERIAL NO.		1600 E. WASHINGTON BLVD. LOS ANGELES, CA 90021	
N.B.			