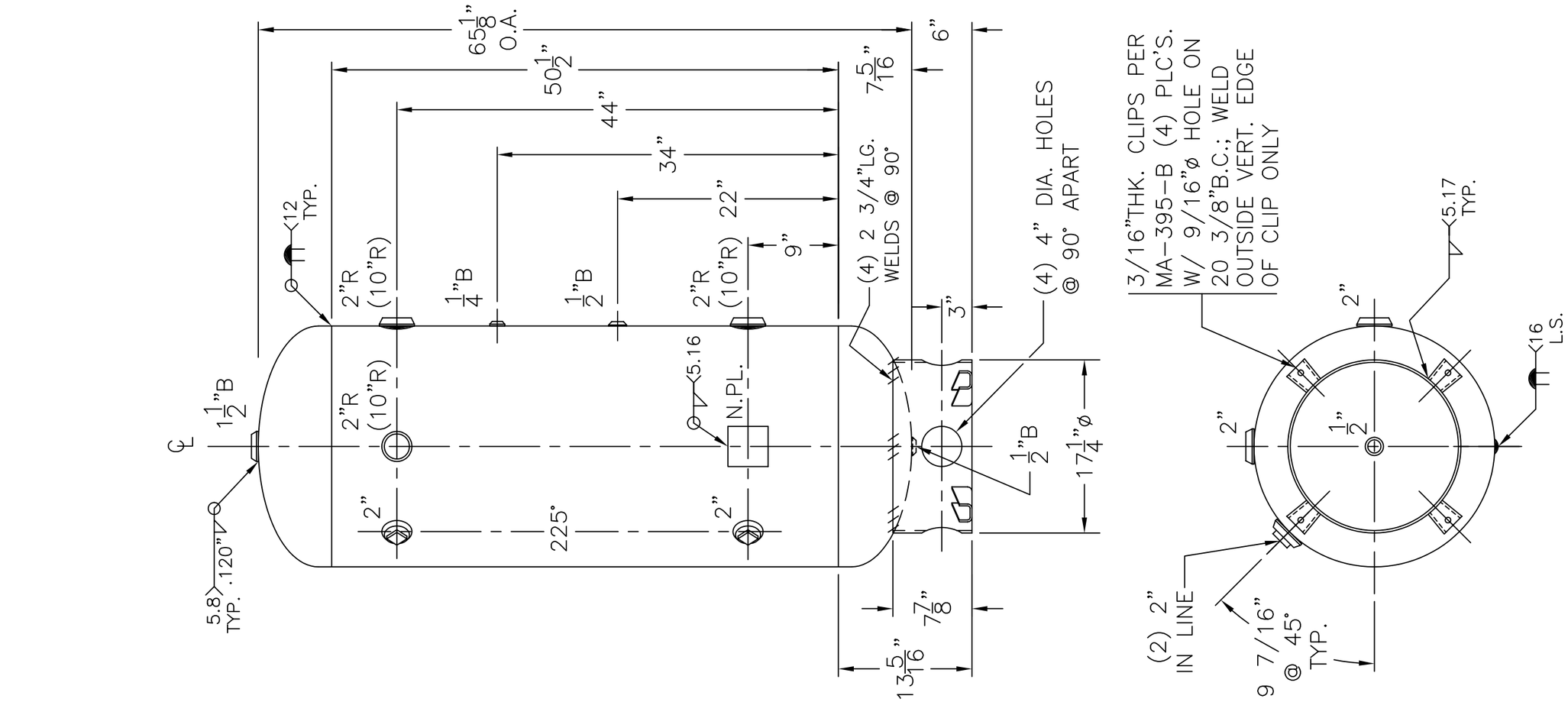

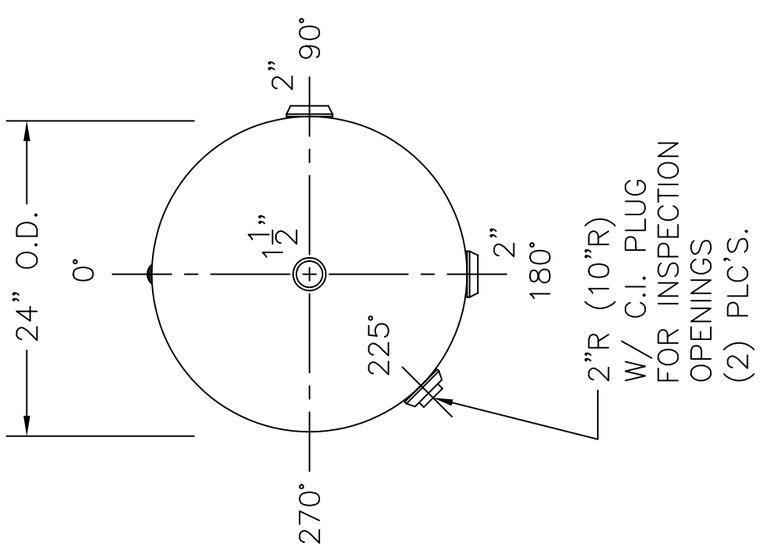

NOTE: 1) HYDRO @ 262 PSIG. MIN.

SHELL / HEADS	.164" SA-414-G 2:1 S.E.	24-VA-120-R — REV. 12-15-06 — DATE: 11-19-86
	JOGGLE	FOR: HANSON STANDARD
		VERT. AIR TANK
	.135" SA-414-G	
		INSIDE: UNPAINTED
M.A.W.P. 200 PSIG. @ 400 °F		
M.D.M.T. -20 °F @ 200 PSIG.		OUTSIDE: PRIME
ASME. SECTION VIII DIV. 1, 2004 ADD 2006		
X-RAY: RT-4 SPOT L.S. ONLY		BY: E.S. — SCALE: 3/4"=12"
GALLONS: 120	WT. 269 LBS.	ROY E. HANSON JR. MFG.
SERIAL NO.		1600 E. WASHINGTON BLVD. LOS ANGELES, CA 90021
N.B.		