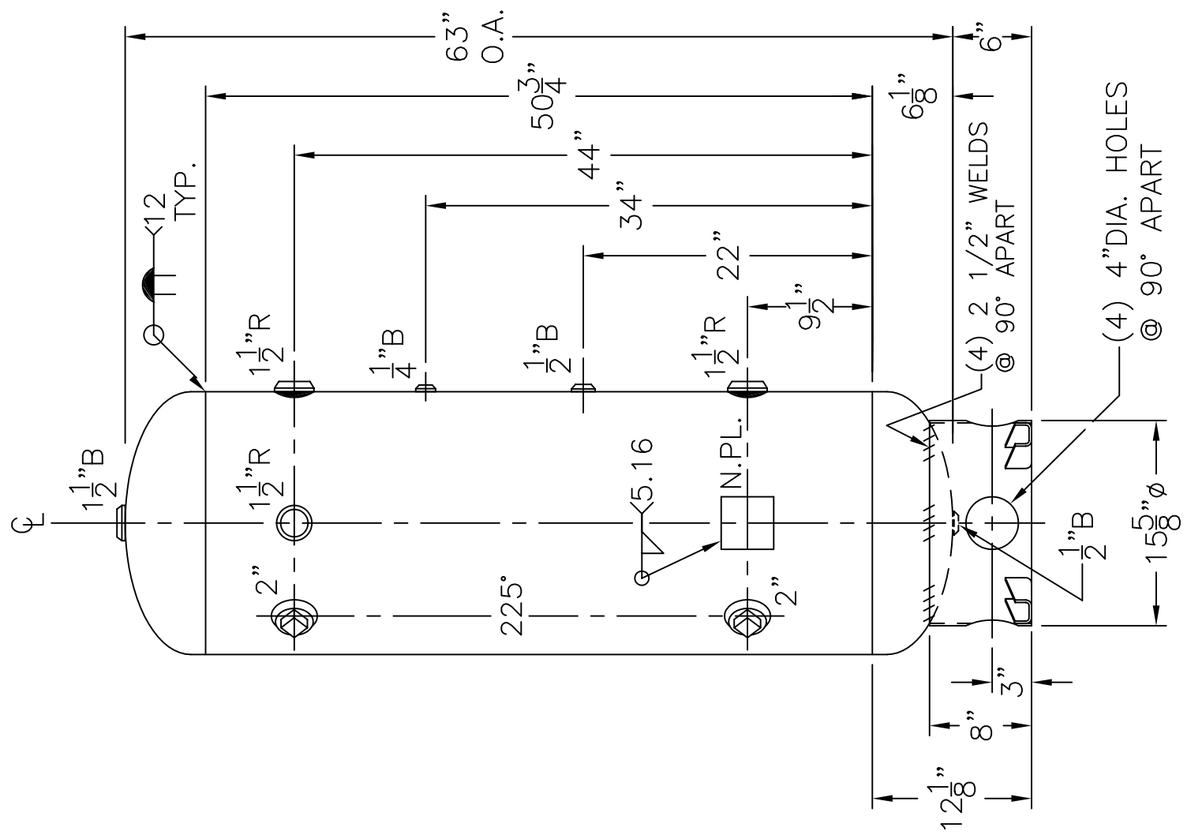

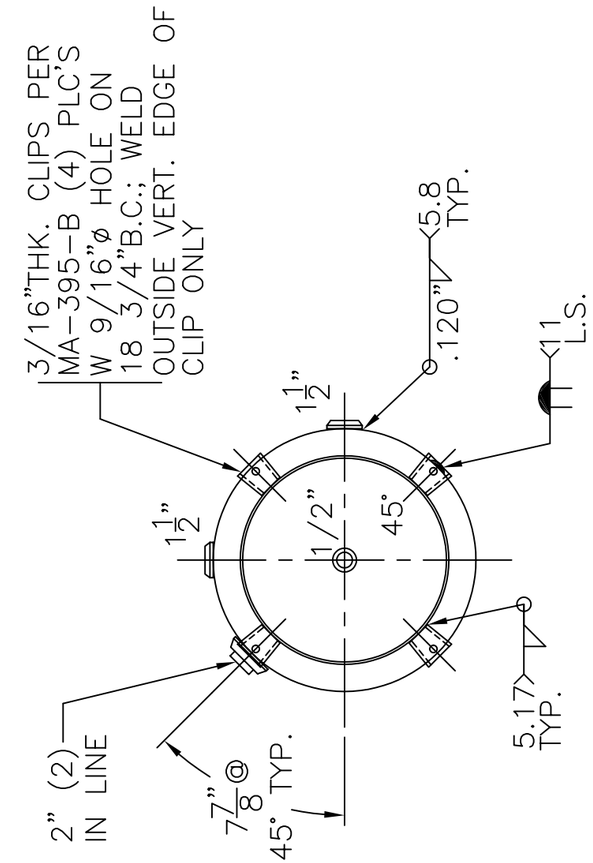

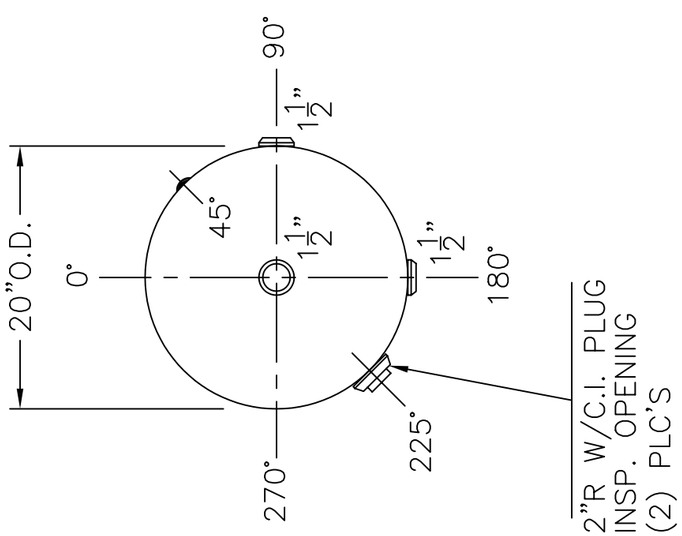

NOTE: 1) HYDRO @ 392 PSIG. MIN.

SHELL / HEADS	.165" SA-414-G 2:1 S.E.	
	JOGGLE - .199" OFFSET	
	.200" SA-455	
M.A.W.P.	300 PSIG. @ 400 °F	
M.D.M.T.	-20 °F @ 300 PSIG.	
ASME. SECTION VIII DIV. 1, 2004 ADD 2006		
X-RAY:	RT-NO	
GALLONS:	80	WT. 255 LBS.
SERIAL NO.		
N.B.		

20-VD-80-R	REV. 4-19-07
	DATE: 4-6-89
FOR: HANSON STANDARD	
VERT. AIR TANK	
INSIDE: UNPAINTED	
OUTSIDE: PRIME	
BY: J.G.	SCALE: 3/4"=12"

ROY E. HANSON JR. MFG.
1600 E. WASHINGTON BLVD.
LOS ANGELES, CA 90021